CONTENTS

PRODUCTS	Page
CONTINUOUS MOTION POTWASHERS.....	2 - 10PS
POTWASHER ACCESSORIES.....	11PS

POWERSOAK POT WASHERS

Utilising a standard mechanical washer or an antiquated triple basin system costs you time, labour, power and chemicals

The Power Soak system does not require an attendant to constantly monitor the system, they just drop the item in the wash tank and walk away, returning periodically to rinse clean items off and place in the sanitiser tank for sanitising, once sanitised the item is simply placed on the draining board to drain

The contiuous rolling action performed by the specially designed jets that are strategically located at the back of the wash tank ensures the items never migrate together and come out cleaner than any mechanical style washer could ever produce

Due to the patented outlet jets and their strategic locations, everything that is placed in a PowerSoak system is guaranteed to be cleaner & quicker with approx 65% less labour required than mechanical style washers

NO FREEZERS, NO OVENS,
JUST POTWASHERS

All Powersoak products are priced on an ex-works basis & do not include delivery

CONTINUOUS MOTION POTWASHERS

Description	Model	Overall Unit Size (mm) WxDxH	Power /Amp	RRP ex GST
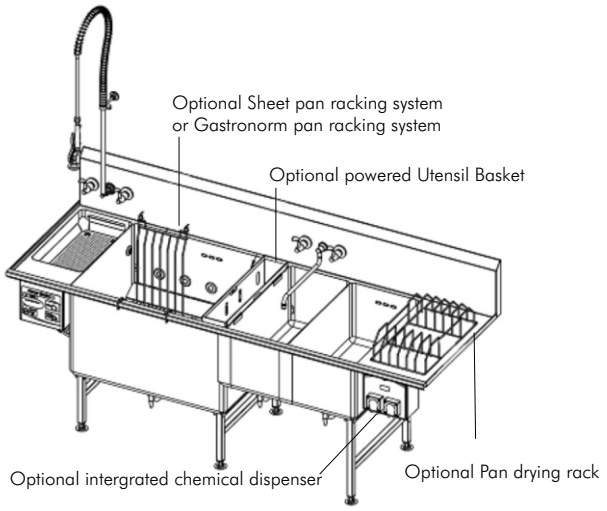				
❑ 2mm 304 stainless steel construction throughout all tanks, drain boards and splashbacks ❑ Low profile wash jets every 150mm of wash tank ❑ Patented uniform wash action throughout entire volume of wash tank ❑ Stainless steel self-draining pump housing and impeller ❑ 7000 watt heater located in wash tank along the rear wall under the perforated intake guard ❑ The factory preset value for the wash tank water temperature is 46°C and can be field-modified +/- 5° C ❑ Powered utensil basket optional ❑ Watermarked ½" faucet assemblies ❑ Watermarked ½" pre- rinse spray assemblies ❑ Rear exit stainless steel ball valve drains for 100% tank drainage ❑ Motor horsepower is proportional to the size of the tank ❑ Modular design allows for quick and easy access to motor pump and all major components ❑ Average flow rate per wash jet is approximately 150 LPM. ❑ Wash tank supported by 32x32x1.2mm 304 stainless steel legs and adjustable feet ❑ All wetted parts of the pump assembly are stainless steel ❑ Continuous heavy duty (TEFC) motors (low maintenance) are provided with all pump assemblies ❑ Complies with Australian Electrical requirements AS NZS 60335.1, AS 3000, AS 3750 ❑ Complies with Sydney Water trade waste guidlelines ❑ See page 11-PS for list of optional extras	SPPS.96L.P2.415	2438 x 865 x 1200	415V *16A* *3ph*	$16,883
	SPPS.96R.P2.415	2438 x 865 x 1200	415V *16A* *3ph*	$16,883

CONTINUOUS MOTION POTWASHERS

Description	Model	Overall Unit Size (mm) WxDxH	Power /Amp	RRP ex GST
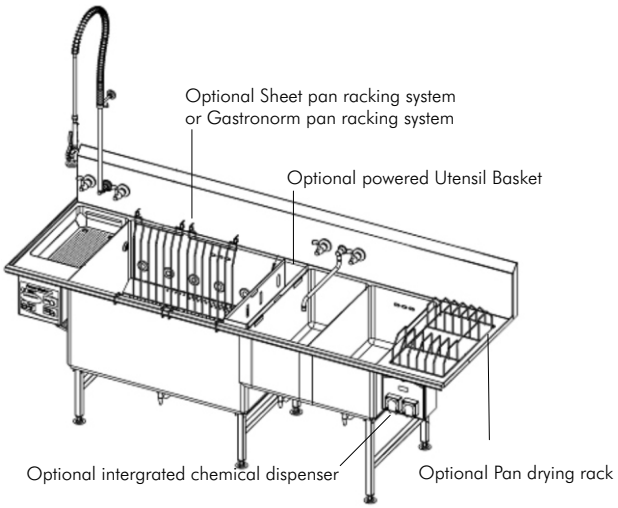				
❑ 2mm 304 stainless steel construction throughout all tanks, drain boards and splashbacks ❑ Low profile wash jets every 150mm of wash tank ❑ Patented uniform wash action throughout entire volume of wash tank ❑ Stainless steel self-draining pump housing and impeller ❑ 7000 watt heater located in wash tank along the rear wall under the perforated intake guard ❑ The factory preset value for the wash tank water temperature is 46°C and can be field-modified +/- 5° C ❑ Powered utensil basket optional ❑ Watermarked ½" faucet assemblies ❑ Watermarked ½" pre- rinse spray assemblies ❑ Rear exit stainless steel ball valve drains for 100% tank drainage ❑ Motor horsepower is proportional to the size of the tank ❑ Modular design allows for quick and easy access to motor pump and all major components ❑ Average flow rate per wash jet is approximately 150 LPM. ❑ Wash tank supported by 32x32x1.2mm 304 stainless steel legs and adjustable feet ❑ All wetted parts of the pump assembly are stainless steel ❑ Continuous heavy duty (TEFC) motors (low maintenance) are provided with all pump assemblies ❑ Complies with Australian Electrical requirements AS NZS 60335.1, AS 3000, AS 3750 ❑ Complies with Sydney Water trade waste guidlelines ❑ See page 11-PS for list of optional extras	SPPS.102L.P2.415	2590 x 865 x 1200	415V *16A* *3ph*	$17,040
	SPPS.102R.P2.415	2590 x 865 x 1200	415V *16A* *3ph*	$17,040

CONTINUOUS MOTION POTWASHERS

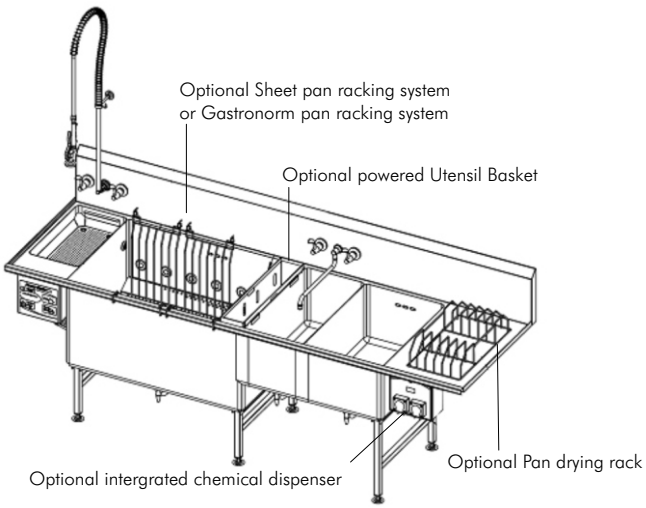

Description	Model	Overall Unit Size (mm) WxDxH	Power /Amp	RRP ex GST
❑ 2mm 304 stainless steel construction throughout all tanks, drain boards and splashbacks ❑ Low profile wash jets every 150mm of wash tank ❑ Patented uniform wash action throughout entire volume of wash tank ❑ Stainless steel self-draining pump housing and impeller ❑ 7000 watt heater located in wash tank along the rear wall under the perforated intake guard ❑ The factory preset value for the wash tank water temperature is 46°C and can be field-modified +/- 5° C ❑ Powered utensil basket optional ❑ Watermarked ½" faucet assemblies ❑ Watermarked ½" pre- rinse spray assemblies ❑ Rear exit stainless steel ball valve drains for 100% tank drainage ❑ Motor horsepower is proportional to the size of the tank ❑ Modular design allows for quick and easy access to motor pump and all major components ❑ Average flow rate per wash jet is approximately 150 LPM. ❑ Wash tank supported by 32x32x1.2mm 304 stainless steel legs and adjustable feet ❑ All wetted parts of the pump assembly are stainless steel ❑ Continuous heavy duty (TEFC) motors (low maintenance) are provided with all pump assemblies ❑ Complies with Australian Electrical requirements AS NZS 60335.1, AS 3000, AS 3750 ❑ Complies with Sydney Water trade waste guidlelines ❑ See page 11-PS for list of optional extras	SPPS.108L.P2.415	2743 x 856 x 1200	415V *16A* *3ph*	$17,190
	SPPS.108R.P2.415	2743 x 856 x 1200	415V *16A* *3ph*	$17,190

CONTINUOUS MOTION POTWASHERS

Description	Model	Overall Unit Size (mm) WxDxH	Power /Amp	RRP ex GST
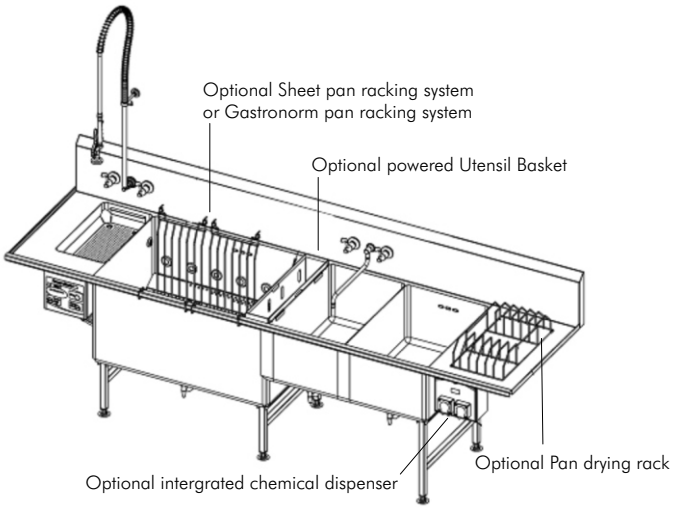				
❑ 2mm 304 stainless steel construction throughout all tanks, drain boards and splashbacks ❑ Low profile wash jets every 150mm of wash tank ❑ Patented uniform wash action throughout entire volume of wash tank ❑ Stainless steel self-draining pump housing and impeller ❑ 7000 watt heater located in wash tank along the rear wall under the perforated intake guard ❑ The factory preset value for the wash tank water temperature is 46°C and can be field-modified +/- 5° C ❑ Powered utensil basket optional ❑ Watermarked ½" faucet assemblies ❑ Watermarked ½" pre- rinse spray assemblies ❑ Rear exit stainless steel ball valve drains for 100% tank drainage ❑ Motor horsepower is proportional to the size of the tank ❑ Modular design allows for quick and easy access to motor pump and all major components ❑ Average flow rate per wash jet is approximately 150 LPM. ❑ Wash tank supported by 32x32x1.2mm 304 stainless steel legs and adjustable feet ❑ All wetted parts of the pump assembly are stainless steel ❑ Continuous heavy duty (TEFC) motors (low maintenance) are provided with all pump assemblies ❑ Complies with Australian Electrical requirements AS NZS 60335.1, AS 3000, AS 3750 ❑ Complies with Sydney Water trade waste guidlelines ❑ See page 11-PS for list of optional extras	SPPS.120L.P2.415	3048 x 865 x 1200	415V *16A* *3ph*	$17,533
	SPPS.120R.P2.415	3048 x 865 x 1200	415V *16A* *3ph*	$17,533

CONTINUOUS MOTION POTWASHERS

Description	Model	Overall Unit Size (mm) WxDxH	Power /Amp	RRP ex GST
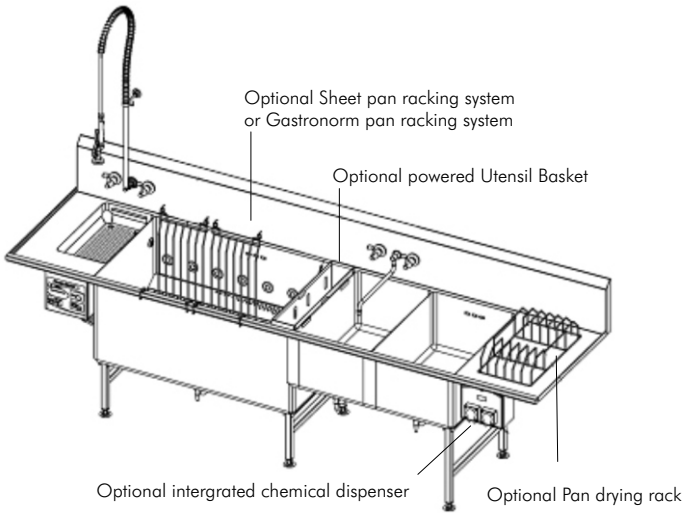				
❑ 2mm 304 stainless steel construction throughout all tanks, drain boards and splashbacks ❑ Low profile wash jets every 150mm of wash tank ❑ Patented uniform wash action throughout entire volume of wash tank ❑ Stainless steel self-draining pump housing and impeller ❑ 7000 watt heater located in wash tank along the rear wall under the perforated intake guard ❑ The factory preset value for the wash tank water temperature is 46°C and can be field-modified +/- 5° C ❑ Powered utensil basket optional ❑ Watermarked ½" faucet assemblies ❑ Watermarked ½" pre- rinse spray assemblies ❑ Rear exit stainless steel ball valve drains for 100% tank drainage ❑ Motor horsepower is proportional to the size of the tank ❑ Modular design allows for quick and easy access to motor pump and all major components ❑ Average flow rate per wash jet is approximately 150 LPM. ❑ Wash tank supported by 32x32x1.2mm 304 stainless steel legs and adjustable feet ❑ All wetted parts of the pump assembly are stainless steel ❑ Continuous heavy duty (TEFC) motors (low maintenance) are provided with all pump assemblies ❑ Complies with Australian Electrical requirements AS NZS 60335.1, AS 3000, AS 3750 ❑ Complies with Sydney Water trade waste guidlelines ❑ See page 11-PS for list of optional extras	SPPS.126L.P2.415	3211 x 865 x 1200	415V *16A* *3ph*	$17,733
	SPPS.126R.P2.415	3211 x 865 x 1200	415V *16A* *3ph*	$17,733

CONTINUOUS MOTION POTWASHERS

Description	Model	Overall Unit Size (mm) WxDxH	Power /Amp	RRP ex GST
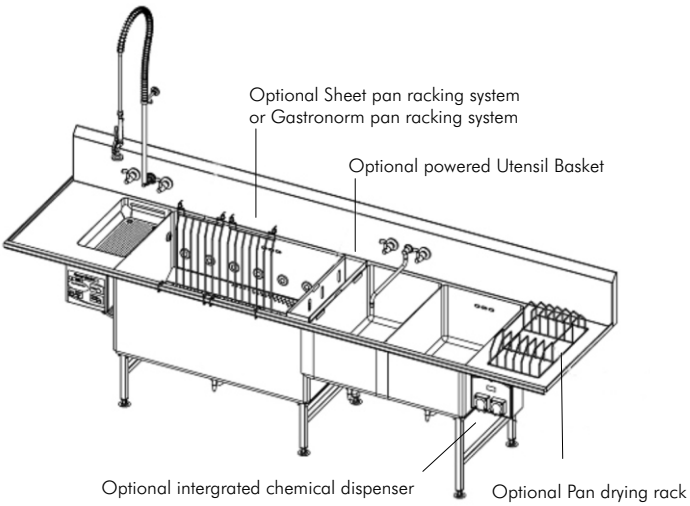				
❑ 2mm 304 stainless steel construction throughout all tanks, drain boards and splashbacks ❑ Low profile wash jets every 150mm of wash tank ❑ Patented uniform wash action throughout entire volume of wash tank ❑ Stainless steel self-draining pump housing and impeller ❑ 7000 watt heater located in wash tank along the rear wall under the perforated intake guard ❑ The factory preset value for the wash tank water temperature is 46°C and can be field-modified +/- 5° C ❑ Powered utensil basket optional ❑ Watermarked ½" faucet assemblies ❑ Watermarked ½" pre- rinse spray assemblies ❑ Rear exit stainless steel ball valve drains for 100% tank drainage ❑ Motor horsepower is proportional to the size of the tank ❑ Modular design allows for quick and easy access to motor pump and all major components ❑ Average flow rate per wash jet is approximately 150 LPM. ❑ Wash tank supported by 32x32x1.2mm 304 stainless steel legs and adjustable feet ❑ All wetted parts of the pump assembly are stainless steel ❑ Continuous heavy duty (TEFC) motors (low maintenance) are provided with all pump assemblies ❑ Complies with Australian Electrical requirements AS NZS 60335.1, AS 3000, AS 3750 ❑ Complies with Sydney Water trade waste guidlelines ❑ See page 11-PS for list of optional extras	SPPS.132L.P2.415	3373 x 865 x 1200	415V *16A* *3ph*	$17,782
	SPPS.132R.P2.415	3373 x 865 x 1200	415V *16A* *3ph*	$17,782

CONTINUOUS MOTION POTWASHERS

Description	Model	Overall Unit Size (mm) WxDxH	Power /Amp	RRP ex GST
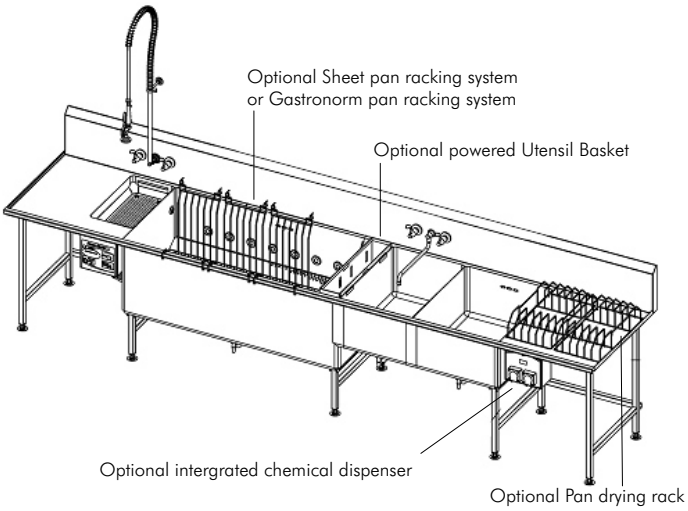				
❑ 2mm 304 stainless steel construction throughout all tanks, drain boards and splashbacks ❑ Low profile wash jets every 150mm of wash tank ❑ Patented uniform wash action throughout entire volume of wash tank ❑ Stainless steel self-draining pump housing and impeller ❑ 7000 watt heater located in wash tank along the rear wall under the perforated intake guard ❑ The factory preset value for the wash tank water temperature is 46°C and can be field-modified +/- 5° C ❑ Powered utensil basket optional ❑ Watermarked ½" faucet assemblies ❑ Watermarked ½" pre- rinse spray assemblies ❑ Rear exit stainless steel ball valve drains for 100% tank drainage ❑ Motor horsepower is proportional to the size of the tank ❑ Modular design allows for quick and easy access to motor pump and all major components ❑ Average flow rate per wash jet is approximately 150 LPM. ❑ Wash tank supported by 32x32x1.2mm 304 stainless steel legs and adjustable feet ❑ All wetted parts of the pump assembly are stainless steel ❑ Continuous heavy duty (TEFC) motors (low maintenance) are provided with all pump assemblies ❑ Complies with Australian Electrical requirements AS NZS 60335.1, AS 3000, AS 3750 ❑ Complies with Sydney Water trade waste guidlelines ❑ See page 11-PS for list of optional extras	SPPS.162L.P2.415	4131 x 865 x 1200	415V *16A* *3ph*	$18,253
	SPPS.162R.P2.415	4131 x 865 x 1200	415V *16A* *3ph*	$18,253

CONTINUOUS MOTION POTWASHERS

Description	Model	Overall Unit Size (mm) WxDxH	Power /Amp	RRP ex GST
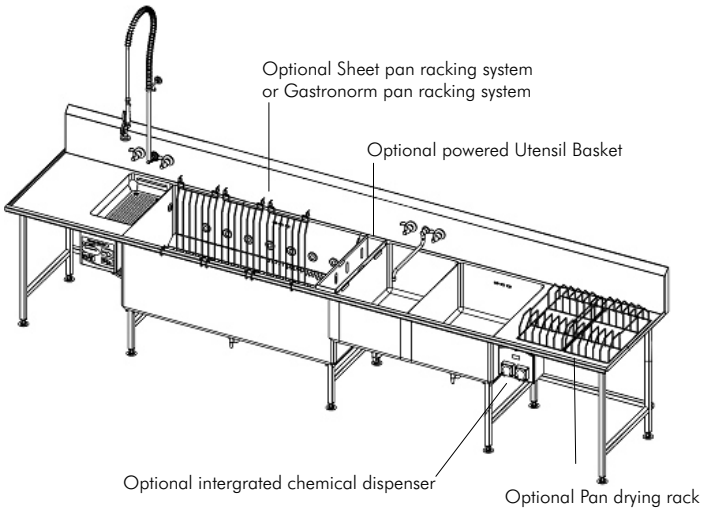				
❑ 2mm 304 stainless steel construction throughout all tanks, drain boards and splashbacks ❑ Low profile wash jets every 150mm of wash tank ❑ Patented uniform wash action throughout entire volume of wash tank ❑ Stainless steel self-draining pump housing and impeller ❑ 7000 watt heater located in wash tank along the rear wall under the perforated intake guard ❑ The factory preset value for the wash tank water temperature is 46°C and can be field-modified +/- 5° C ❑ Powered utensil basket optional ❑ Watermarked ½" faucet assemblies ❑ Watermarked ½" pre- rinse spray assemblies ❑ Rear exit stainless steel ball valve drains for 100% tank drainage ❑ Motor horsepower is proportional to the size of the tank ❑ Modular design allows for quick and easy access to motor pump and all major components ❑ Average flow rate per wash jet is approximately 150 LPM. ❑ Wash tank supported by 32x32x1.2mm 304 stainless steel legs and adjustable feet ❑ All wetted parts of the pump assembly are stainless steel ❑ Continuous heavy duty (TEFC) motors (low maintenance) are provided with all pump assemblies ❑ Complies with Australian Electrical requirements AS NZS 60335.1, AS 3000, AS 3750 ❑ Complies with Sydney Water trade waste guidlelines ❑ See page 11-PS for list of optional extras	SPPS.168L.P2.415	4281 x 865 x 1200	415V *16A* *3ph*	$18,296
	SPPS.168R.P2.415	4281 x 865 x 1200	415V *16A* *3ph*	$18,296

POTWASHER ACCESSORIES

Description	Model	Overall Unit Size (mm) WxDxH	Power /Amp	RRP ex GST
GASTRONORM 1/1RACKS				
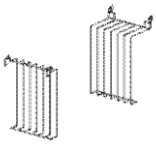 Set of 6	SPPS.GPRS.6	65mm deep		$800
System Configuration				
PIZZA PAN RACK				
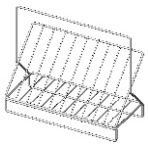 Hold 10 pans	SPPS.PPR			$180
DETERGENT - SANITISER DISPENSER				
	SPPS.CI			$1,400
MOBILE DRYING RACK				
Mobile Drying Rack Unit. MetroMax unit	ME.PR48VX2	660 x 1270 x 1702		$2190
POWERED UTENSIL BASKET				
	SPPS.UBS			$440
PAN DRYING RACK				
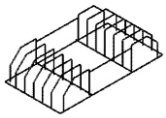 6 pan capacity	SPPS.SP.DR.6	324 x 596 x 145		$380

System Configuration

Tank Size	No. of racks	No. of pans
915mm wide	1	6
1070mm wide	2	12
1220mm wide	2	12
1525mm wide	3	18